CAD-Dateien

.dwg CAD files available to download from pCon Catalog/pCon.Box

OFML data available on all pCon platforms
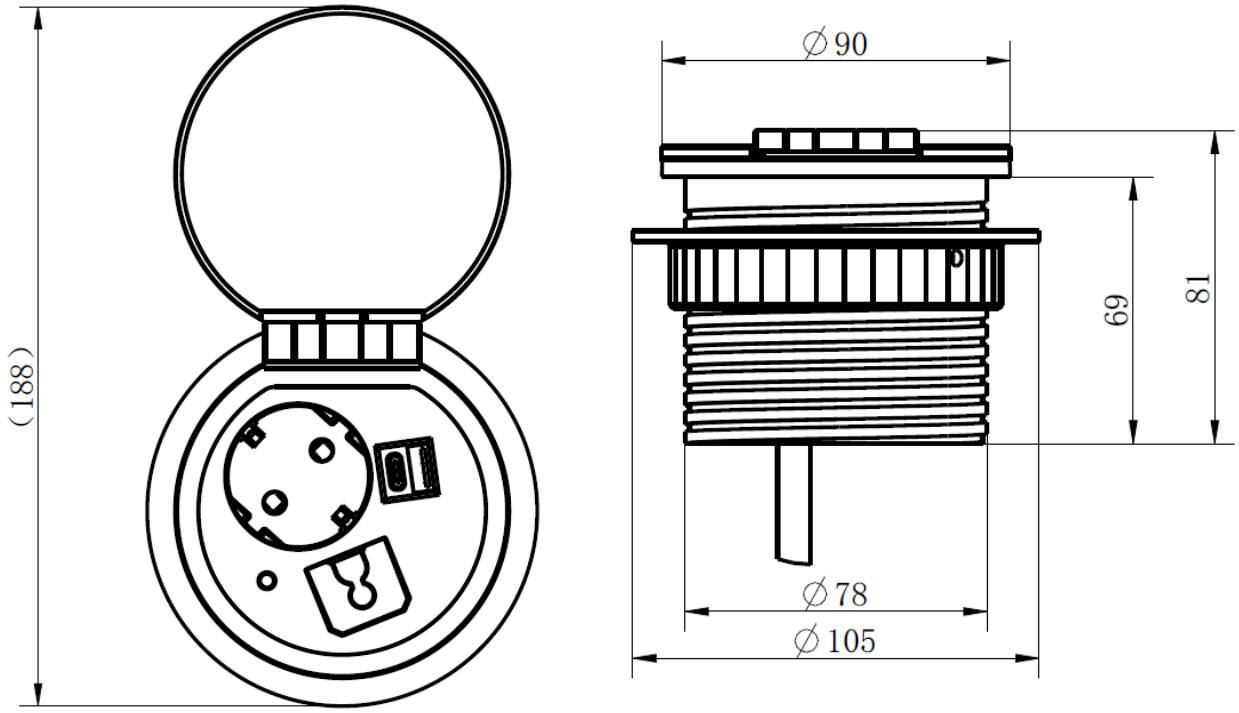
Maßzeichnungen