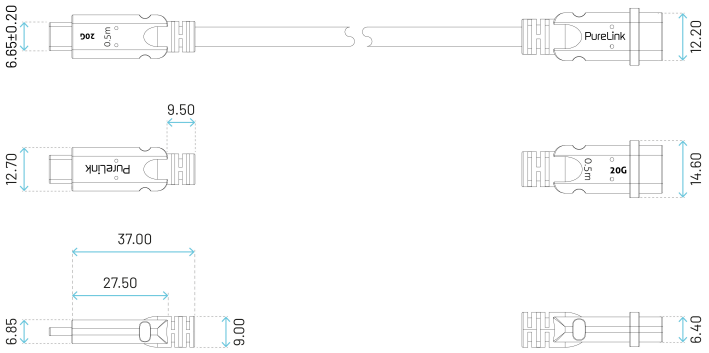

All measurements in mm.

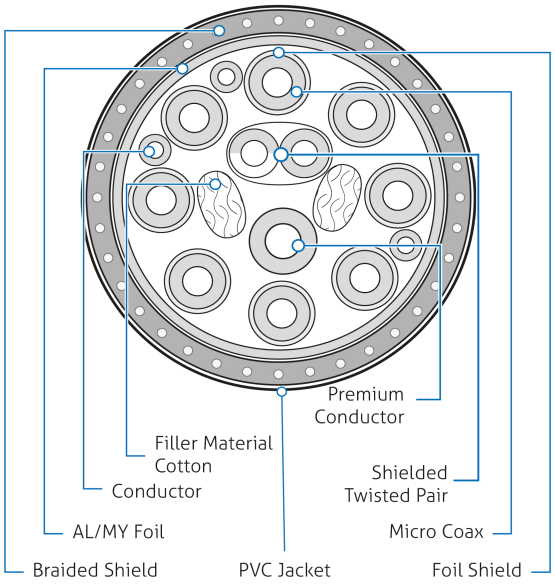

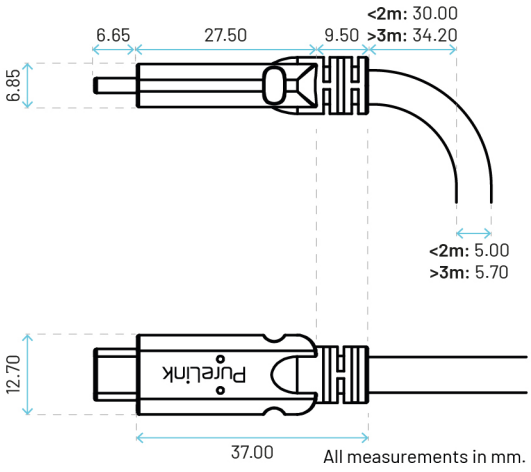

All measurements in mm.