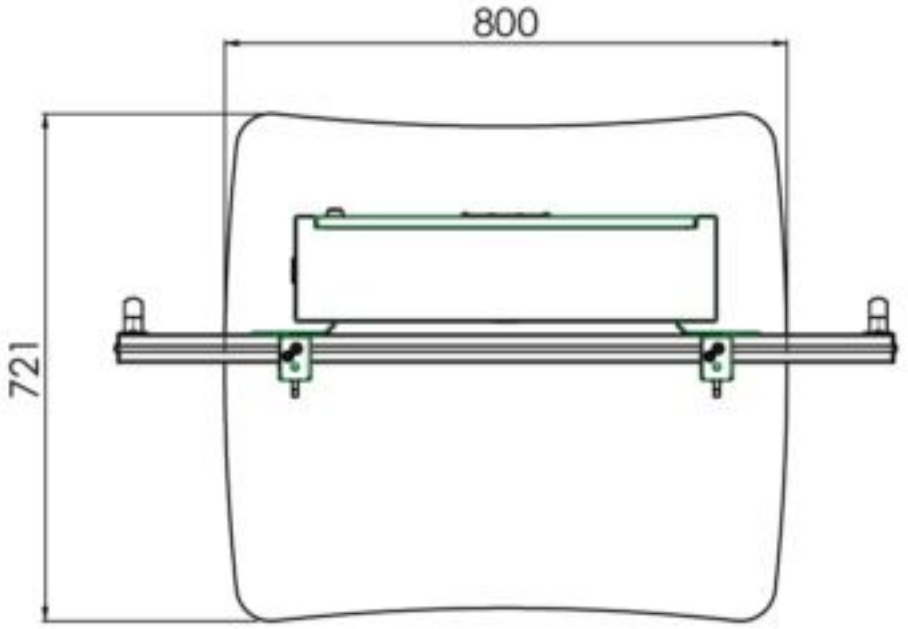
800
721

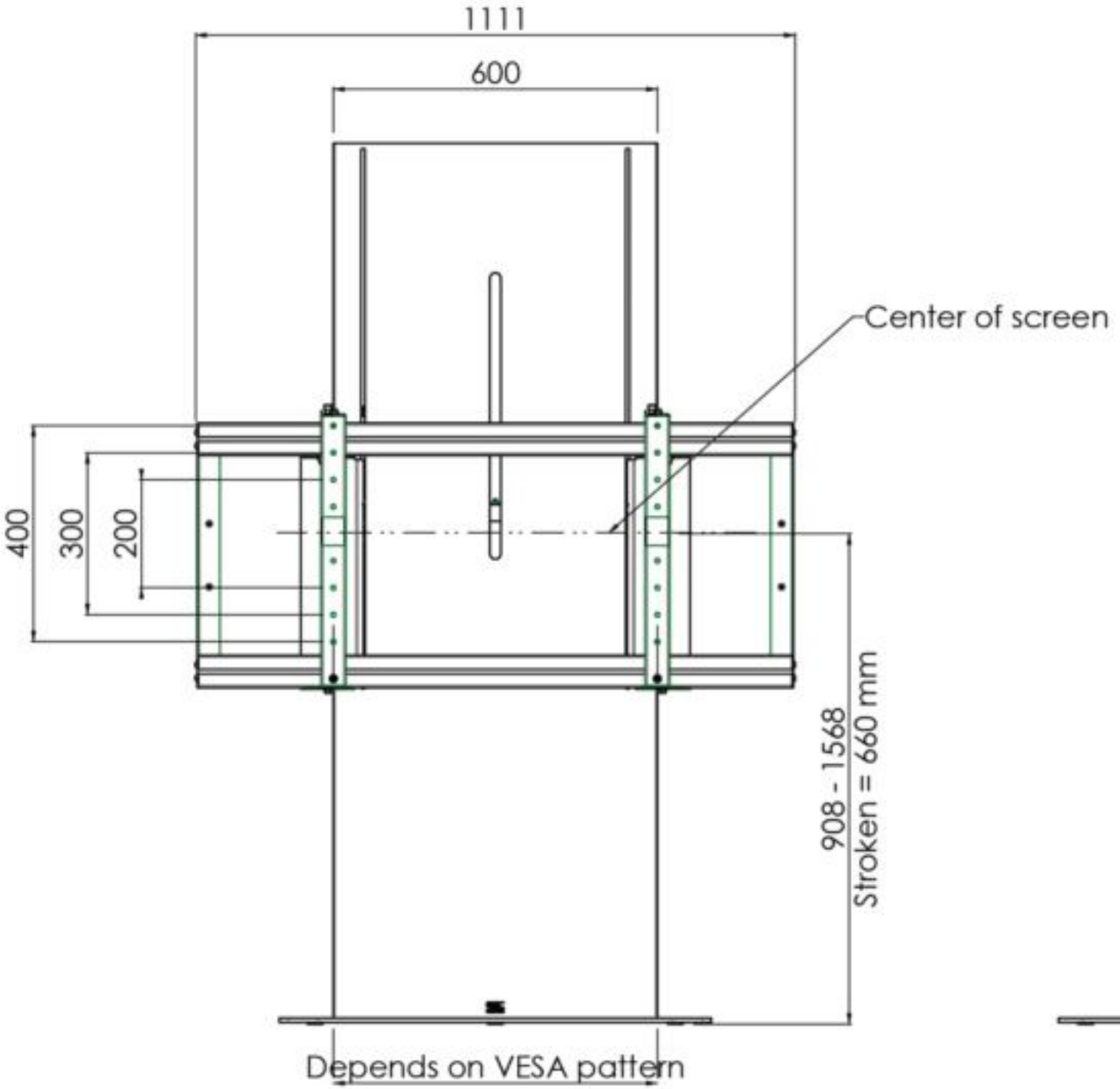
1111
600
Center of screen
400
300
200
908 - 1568
Stroken = 660 mm
Depends on VESA pattern

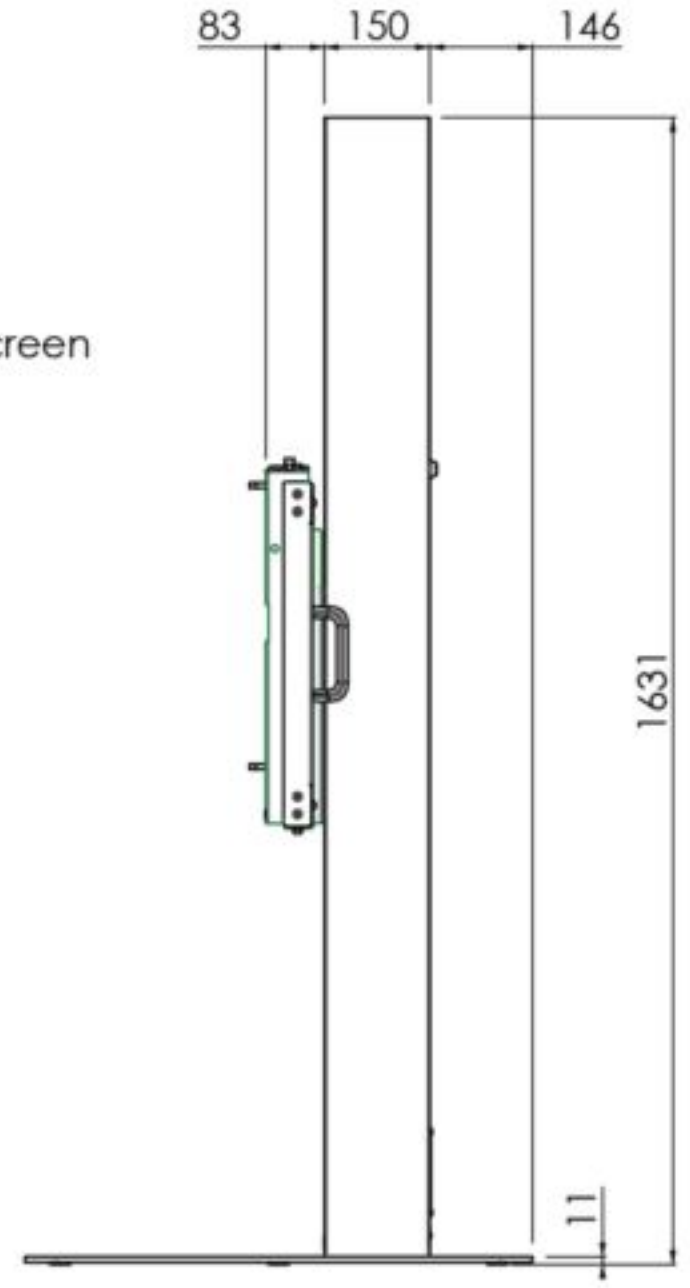
83
150
146
1631
11