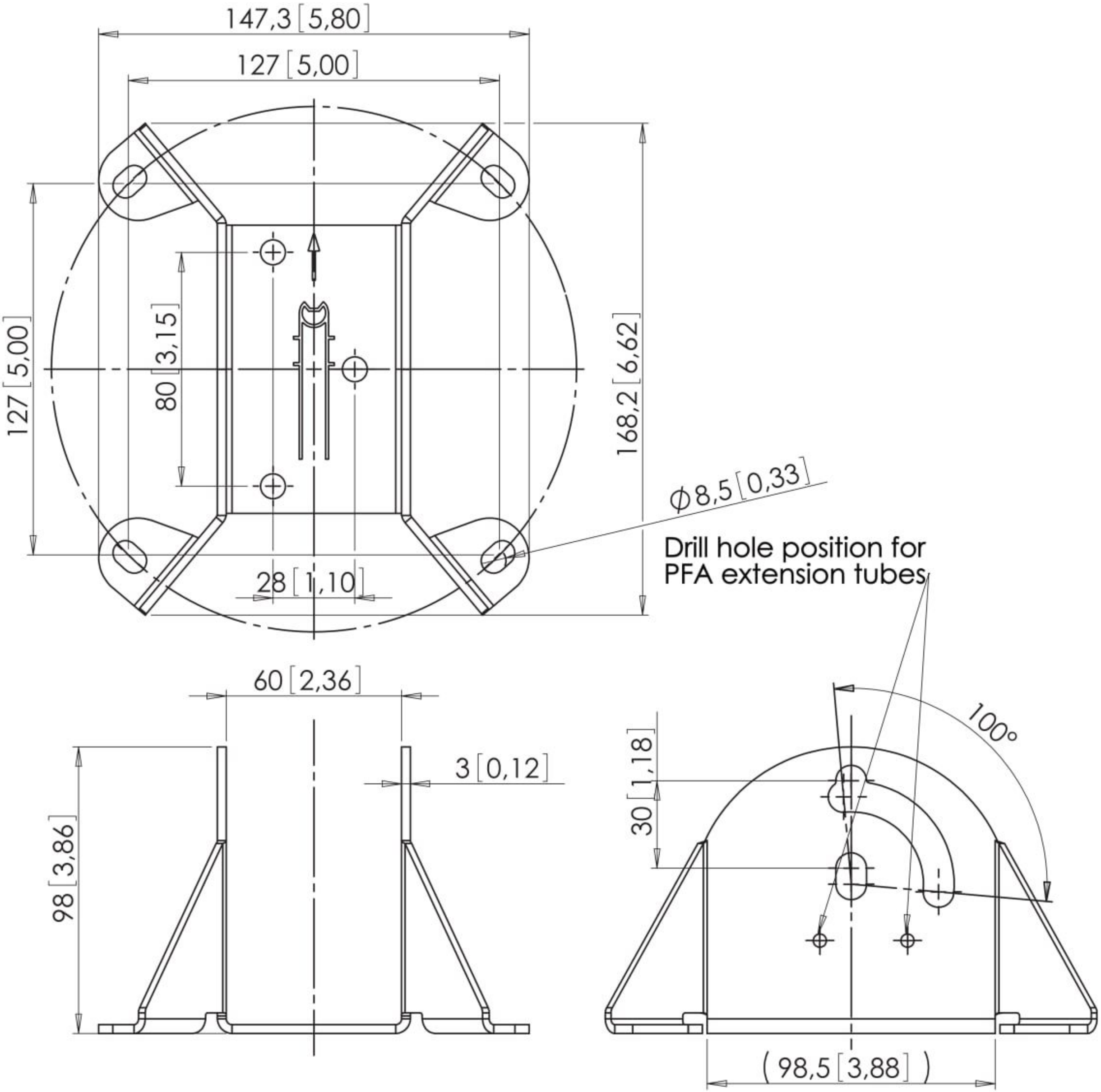
147,3 [5,80]
127 [5,00]
127 [5,00]
80 [3,15]
168,2 [6,62]
Ø8,5 [0,33]
Drill hole position for
PFA extension tubes
28 [1,10]
60 [2,36]
3 [0,12]
98 [3,86]
100°
30 [1,18]
(98,5 [3,88])