WL55-885BL1

NEOMOUNTS WL55-885BL1 FLOOR-TO-WALL MOUNT 65-105" - MOTORISED

SPECIFICATIONS

GENERAL

Min. screen size*	65
Max. screen size*	105
Max. weight	120
Screens	1
Distance to wall	20,6-24,6 cm
VESA maximum	1000c600
VESA minimum	200x200

FUNCTIE

Height adjustment	112-212 cm
Height adjustment speed	50
Lockable	Lockable - Padlock not included
Height	212 cm
Width	111 cm
Depth	37,5 cm
Adjustment type	Motorised

INFORMATION

Color	Black
Main material	Steel
Warranty	5 year

*Please note: The inch sizes stated are just an indication, combined with the weight and VESA sizes. The maximum weight and VESA size are absolute restrictions for the products and should not be exceeded.

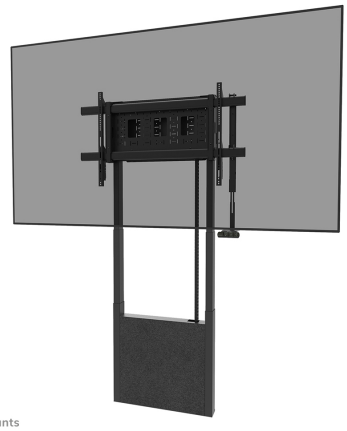

Neomounts MOVE Lift X WL55-885BL1 Floor-to-wall mount - 65-105" - max 120 kg - motorised height adjustment 112-212 cm - 50mm/sec - VESA 200x200-1000x600 - lockable - black

The Neomounts WL55-885BL1 MOVE Lift X is a Floor-to-wall mount for displays from 65" up to 105" with a maximum weight capacity of 120 kg. The mount has 100 cm motorised height adjustment (50 mm/second), operated with a digital control panel featuring three memory settings and height limitation settings, and features an anti-collision system for extra safety. A lockable hardware compartment is integrated into the mount.

The MOVE Lift X Floor-to-wall mount is designed for a secure and professional installation, equipped with adjustable wall brackets at the rear that allow for installation at a precise distance from the wall, easily accommodating skirting boards. This ensures solid and secure installation. Tightly integrated cable management conceals and routes cables from wall mount to screen, while a stylish felt cover at the front neatly conceals the lower base for a clean and professional look. The floor-to-wall mount is ideal for meeting rooms, classrooms, presentation areas and other professional environments where a secure screen installation with flexible height adjustment is required.

The MOVE Lift X Floor-to-wall mount is packed partially pre-assembled, to ensure fast and easy installation. The display can be secured by locking the brackets using a padlock (not included). The WL55-885BL1 has a distance to the wall of 37.5 cm and is suitable for screens that meet VESA hole patterns from 200x200 to 1000x600 mm.

The universal AV30-500BL videobar & multimedia kit is optionally available and enables the installation of a separate cam shelf and multimedia device shelf to the mount.

Neomounts®

WL55-885BL1

NEOMOUNTS WL55-885BL1 FLOOR-TO-WALL MOUNT 65-105" - MOTORISED

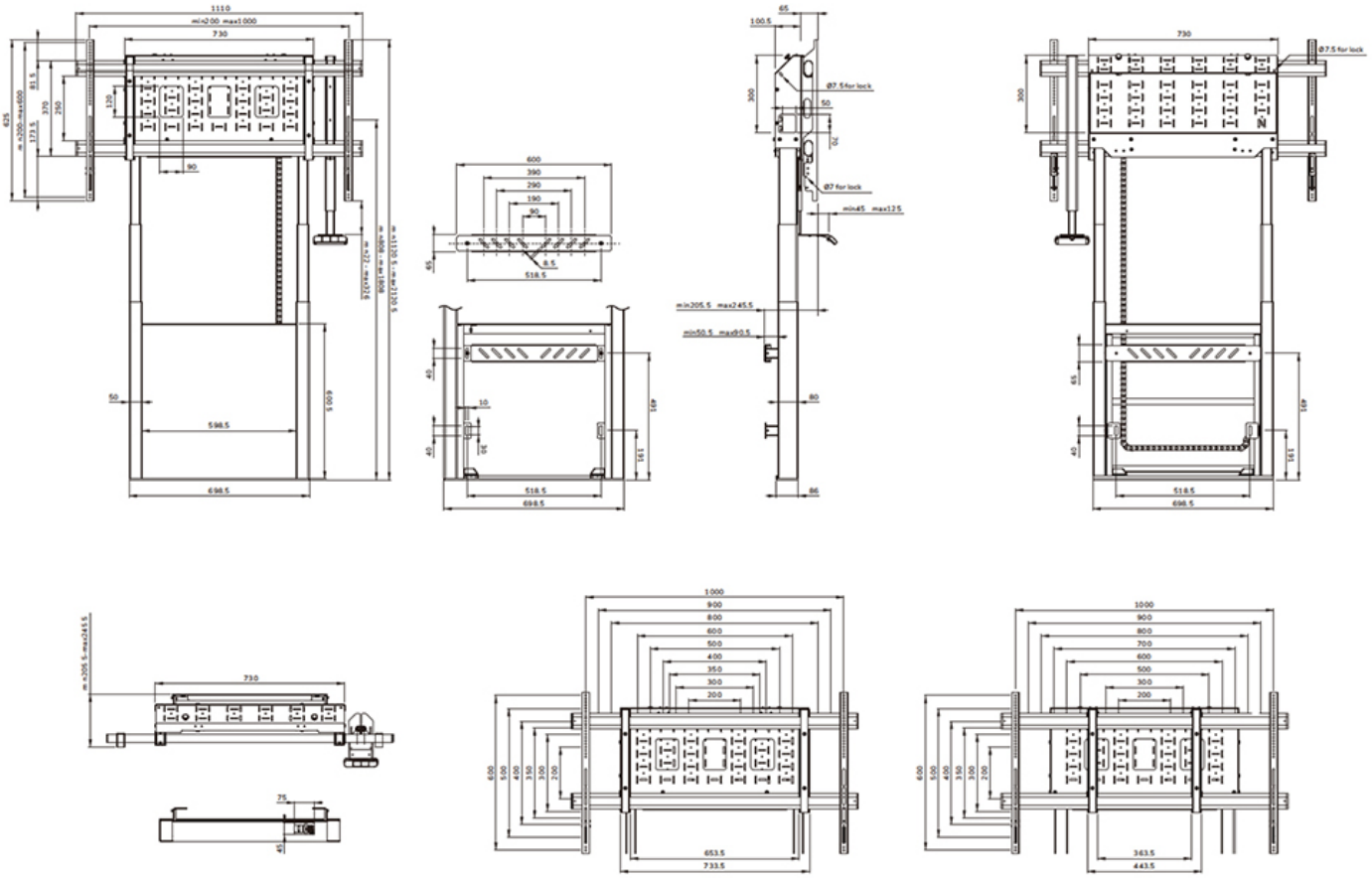

Neomounts

Measuring unit: mm

WL55-885WH1

NEOMOUNTS WL55-885WH1 FLOOR-TO-WALL MOUNT 65-105" - MOTORISED

SPECIFICATIONS

GENERAL

Min. screen size*	65
Max. screen size*	105
Max. weight	120
Screens	1
Distance to wall	20,6-24,6 cm
VESA maximum	1000x600
VESA minimum	200x200

FUNCTIE

Height adjustment	112-212 cm
Height adjustment speed	50
Lockable	Lockable - Padlock not included
Height	212 cm
Width	111 cm
Depth	37,1 cm
Adjustment type	Motorised

INFORMATION

Color	White
Main material	Steel
Warranty	5 year

*Please note: The inch sizes stated are just an indication, combined with the weight and VESA sizes. The maximum weight and VESA size are absolute restrictions for the products and should not be exceeded.

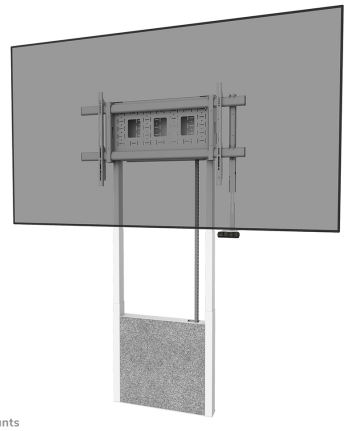

Neomounts MOVE Lift X WL55-885WH1 Floor-to-wall mount - 65-105" - max 120 kg - motorised height adjustment 112-212 cm - 50mm/sec - VESA 200x200-1000x600 - lockable - white

The Neomounts WL55-885WH1 MOVE Lift X is a Floor-to-wall mount for displays from 65" up to 105" with a maximum weight capacity of 120 kg. The mount has 100 cm motorised height adjustment (50 mm/second), operated with a digital control panel featuring three memory settings and height limitation settings, and features an anti-collision system for extra safety. A lockable hardware compartment is integrated into the mount.

The MOVE Lift X Floor-to-wall mount is designed for a secure and professional installation, equipped with adjustable wall brackets at the rear that allow for installation at a precise distance from the wall, easily accommodating skirting boards. This ensures solid and secure installation. Tightly integrated cable management conceals and routes cables from wall mount to screen, while a stylish felt cover at the front neatly conceals the lower base for a clean and professional look. The floor-to-wall mount is ideal for meeting rooms, classrooms, presentation areas and other professional environments where a secure screen installation with flexible height adjustment is required.

The MOVE Lift X Floor-to-wall mount is packed partially pre-assembled, to ensure fast and easy installation. The display can be secured by locking the brackets using a padlock (not included). The WL55-885WH1 has a distance to the wall of 37.5 cm and is suitable for screens that meet VESA hole patterns from 200x200 to 1000x600 mm.

The universal AV30-500BL videobar & multimedia kit is optionally available and enables the installation of a separate cam shelf and multimedia device shelf to the mount.

Neomounts®

WL55-885WH1

NEOMOUNTS WL55-885WH1 FLOOR-TO-WALL MOUNT 65-105" - MOTORISED

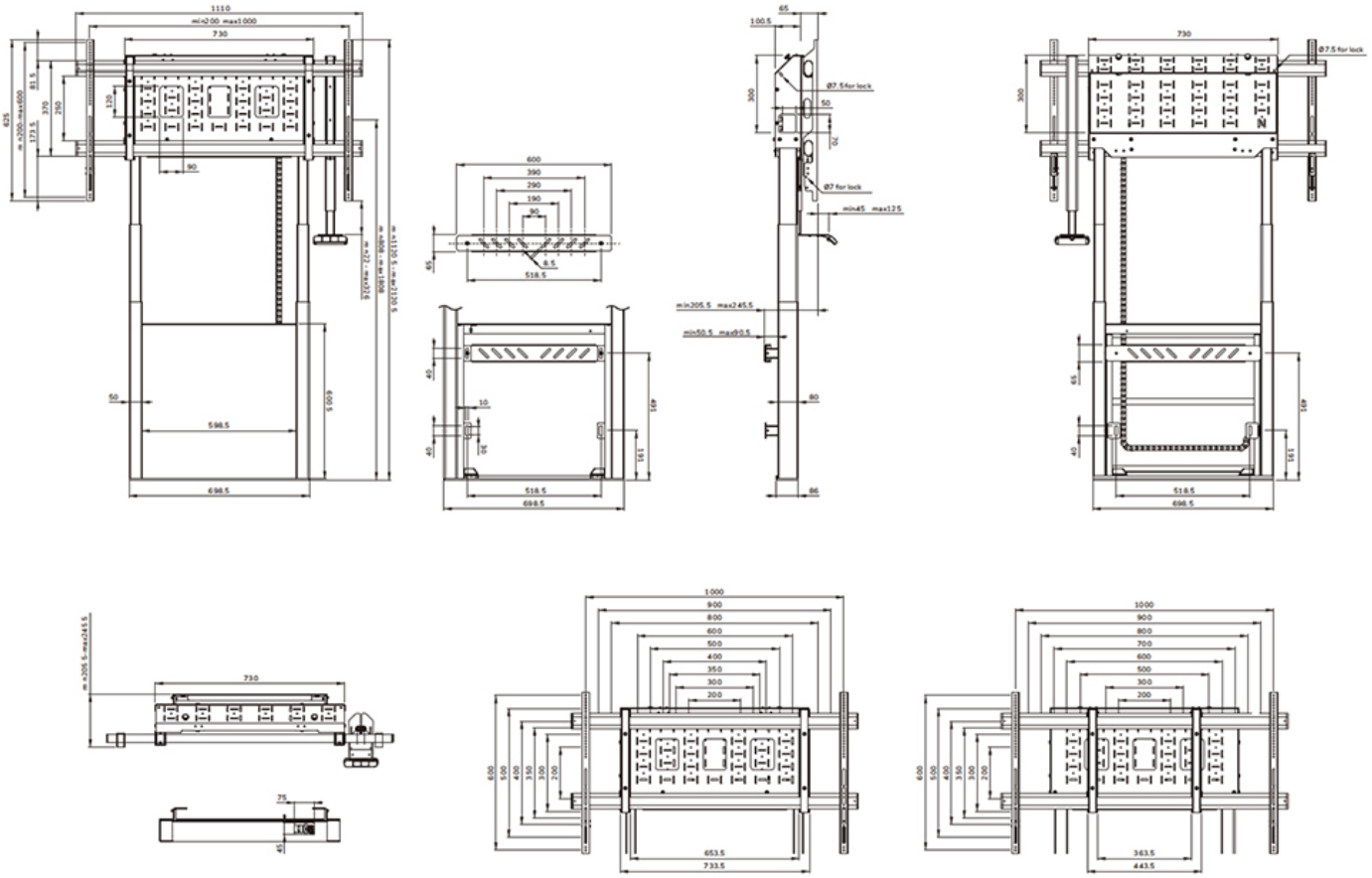

Neomounts

Measuring unit: mm