FL55-885BL1

NEOMOUNTS FL55-885BL1 TV TROLLEY 65-105" - MOTORISED

SPECIFICATIONS

GENERAL

Min. screen size*	65
Max. screen size*	105
Max. weight	120
Screens	1
Distance to wall	39,2
VESA maximum	1000x600 mm
VESA minimum	200x200 mm

FUNCTIE

Height adjustment	125,4-235,4 cm
Height adjustment speed	50
Lockable	Lockable - Padlock not included
Height	235,4 cm
Width	121,9 cm
Depth	83,1 cm
Adjustment type	Motorised

INFORMATION

Series	MOVE Lift
Color	Black
Main material	Steel
Warranty	5 year

*Please note: The inch sizes stated are just an indication, combined with the weight and VESA sizes. The maximum weight and VESA size are absolute restrictions for the products and should not be exceeded.

Neomounts MOVE Lift X FL55-885BL1 TV Trolley - 65-105" - max 120 kg - motorised height adjustment 125,4-235,4 cm - 50mm/sec - VESA 200x200-1000x600 - lockable - black

The Neomounts FL55-885BL1 MOVE Lift X is a mobile floor stand for displays from 65" up to 105" with a maximum weight capacity of 120 kg. The trolley has 100 cm motorised height adjustment (50 mm/second), is operated with a digital control panel featuring three memory settings and height limitation settings and features an anti-collision system for extra safety. A lockable hardware compartment is integrated into the trolley.

The MOVE Lift X trolley is designed for flexible use and can be easily moved from room to room. Four 10 cm solid double locking caster wheels ensure smooth and easy movement, while allowing the trolley to be securely locked in place when needed. This makes the FL55-885BL1 ideal for meeting rooms, classrooms, presentation areas and other professional environments where screens need to be repositioned regularly. Tightly integrated cable management conceals and routes cables from floor stand to screen, while a stylish felt cover at the front neatly conceals the lower base for a clean and professional look.

The floor stand is packed partially pre-assembled, to ensure fast and easy installation. The display can be secured by locking the brackets using a padlock (not included). The FL55-885BL1 is suitable for screens that meet VESA hole patterns from 200x200 to 1000x600 mm.

The universal AV30-500BL videobar & multimedia kit and ABL-875 shelf are optionally available and enable the installation of a separate cam shelf and multimedia device shelf to the trolley.

Neomounts®

FL55-885BL1

NEOMOUNTS FL55-885BL1 TV TROLLEY 65-105" - MOTORISED

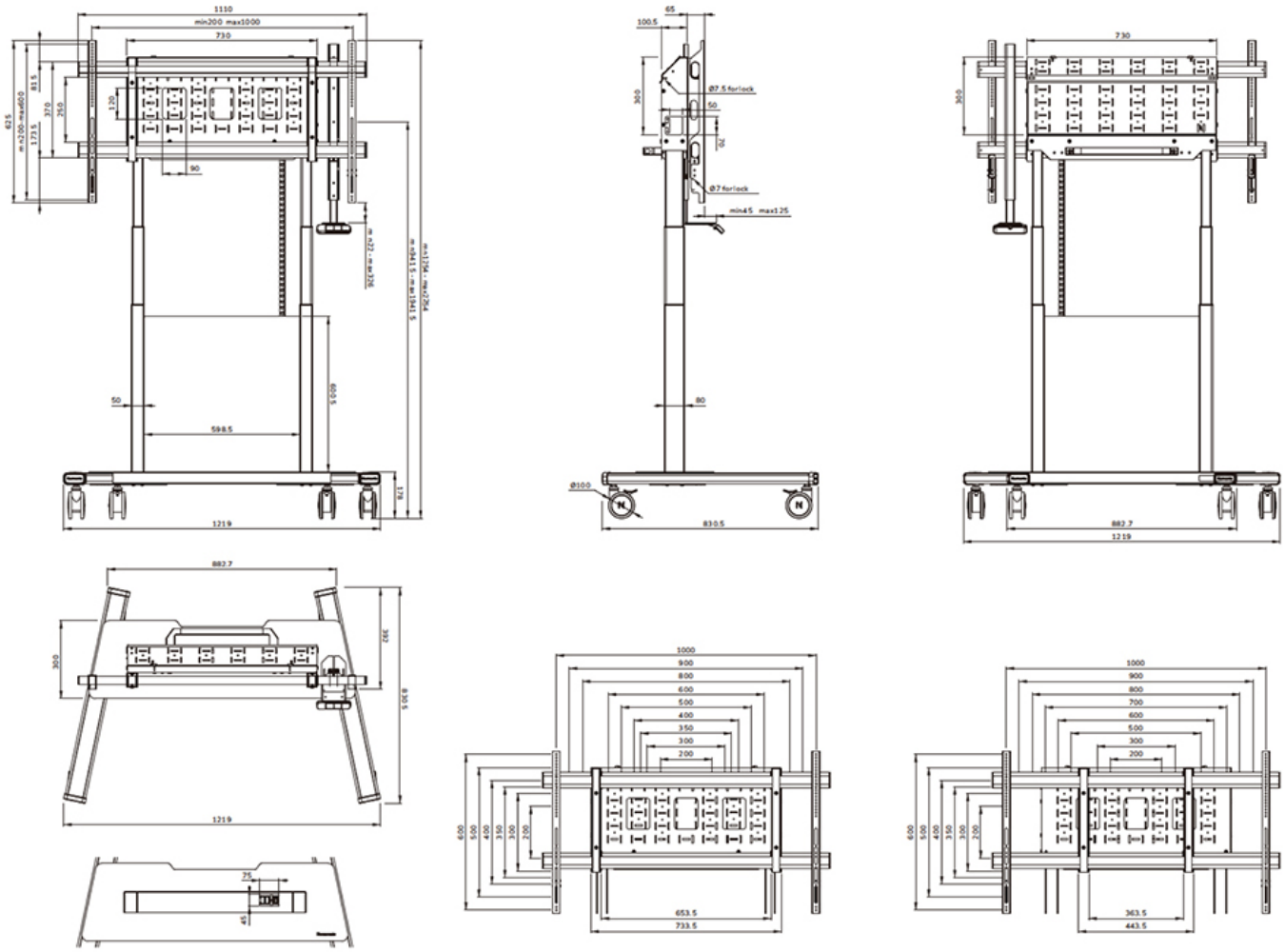

Neomounts

Measuring unit: mm

FL55-885WH1

NEOMOUNTS FL55-885WH1 TV TROLLEY 65-105" - MOTORISED

SPECIFICATIONS

GENERAL

Min. screen size*	65
Max. screen size*	105
Max. weight	120
Screens	1
Distance to wall	39,2
VESA maximum	1000x600
VESA minimum	200x200

FUNCTIE

Height adjustment	125,4-235,4 cm
Height adjustment speed	50
Lockable	Lockable - Padlock not included
Height	235,4 cm
Width	121,9 cm
Depth	83,1 cm
Adjustment type	Motorised

INFORMATION

Color	White
Main material	Steel
Warranty	5 year

*Please note: The inch sizes stated are just an indication, combined with the weight and VESA sizes. The maximum weight and VESA size are absolute restrictions for the products and should not be exceeded.

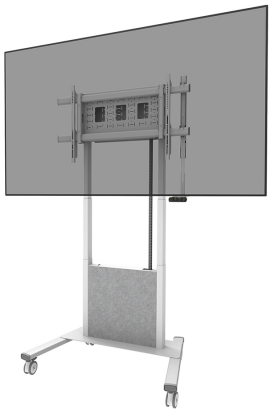

Neomounts MOVE Lift X FL55-885WH1 TV Trolley - 65-105" - max 120 kg - motorised height adjustment 125,4-235,4 cm - 50mm/sec - VESA 200x200-1000x600 - lockable - white

The Neomounts FL55-885WH1 MOVE Lift X is a mobile floor stand for displays from 65" up to 105" with a maximum weight capacity of 120 kg. The trolley has 100 cm motorised height adjustment (50 mm/second), is operated with a digital control panel featuring three memory settings and height limitation settings and features an anti-collision system for extra safety. A lockable hardware compartment is integrated into the trolley.

The MOVE Lift X trolley is designed for flexible use and can be easily moved from room to room. Four 10 cm solid double locking caster wheels ensure smooth and easy movement, while allowing the trolley to be securely locked in place when needed. This makes the FL55-885WH1 ideal for meeting rooms, classrooms, presentation areas and other professional environments where screens need to be repositioned regularly. Tightly integrated cable management conceals and routes cables from floor stand to screen, while a stylish felt cover at the front neatly conceals the lower base for a clean and professional look.

The floor stand is packed partially pre-assembled, to ensure fast and easy installation. The display can be secured by locking the brackets using a padlock (not included). The FL55-885WH1 is suitable for screens that meet VESA hole patterns from 200x200 to 1000x600 mm.

The universal AV30-500BL videobar & multimedia kit and ABL-875 shelf are optionally available and enable the installation of a separate cam shelf and multimedia device shelf to the trolley.

Neomounts®

FL55-885WH1

NEOMOUNTS FL55-885WH1 TV TROLLEY 65-105" - MOTORISED

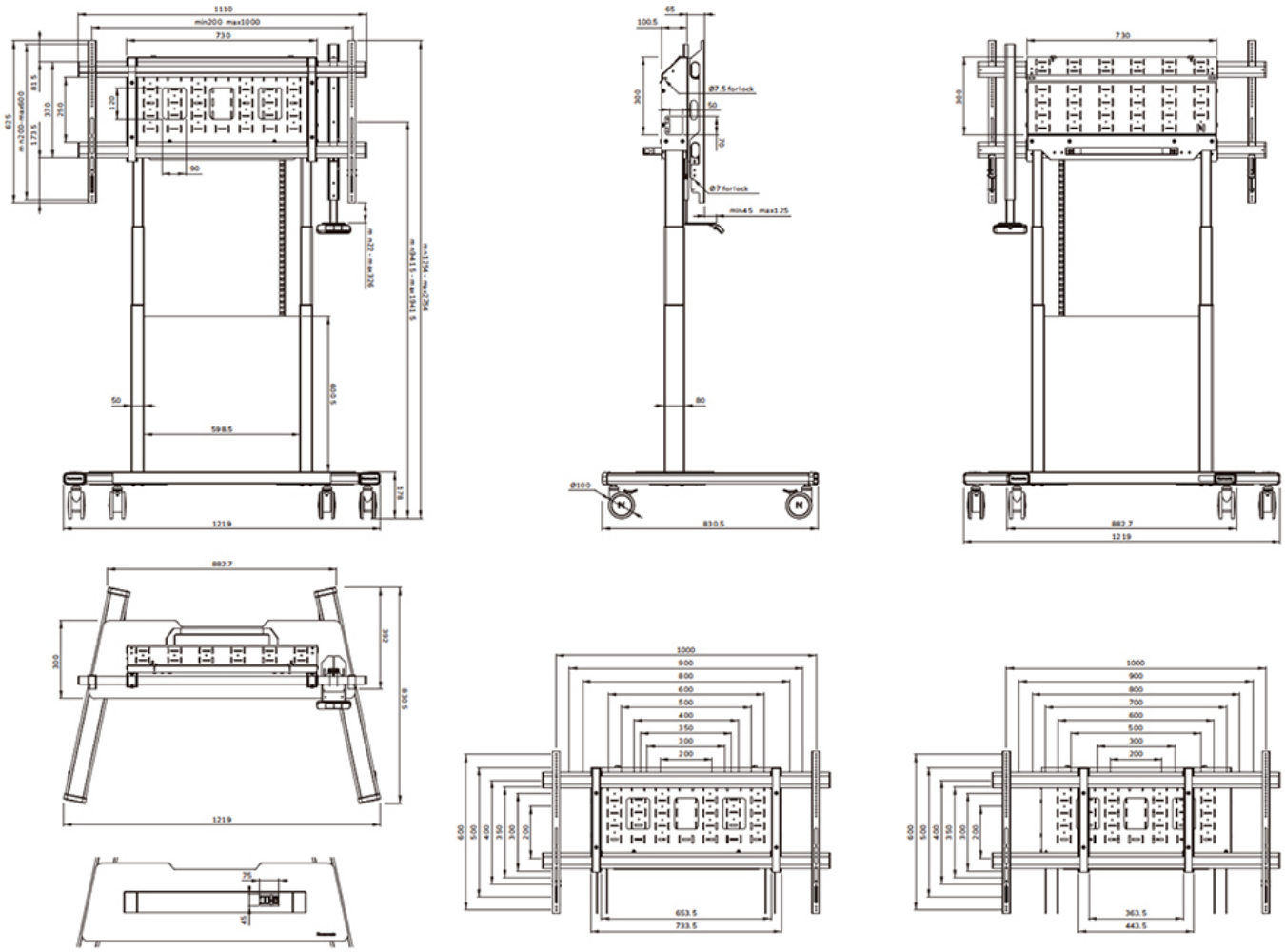

Neomounts

Measuring unit: mm